DSPM INC.
DIGITAL SIGNAL POWER MANUFACTURER
www.DSPManufacturing.com

$75
Price Each

Eternalight 1
Online Emergency Lighting Inverter

User's Manual #018-0135-01 Revision C

Phone: 1.877.DSPM.POWER
1.877.377.6769
Fax: 909.930.3335
Website: www.DSPManufacturing.com
E-Mail: techsupport@dspmanufacturing.com

TABLE OF CONTENTS

TABLE OF CONTENTS 2

REVISION HISTORY 4

REPRODUCTION OR DISTRIBUTION FORBIDDEN 5

ABOUT THIS MANUAL 6

SECTION HOW TO USE THIS MANUAL 6
SECTION TECHNICAL ASSISTANCE 6

IMPORTANT SAFETY INSTRUCTIONS 7

SECTION NOTES AND SAFETY INFORMATION 7

CHAPTER 1 INTRODUCTION 11

SECTION 1.1. GENERAL 11
SECTION 1.2. DEFINITIONS 11
SECTION 1.3. THEORY OF OPERATION 12
SECTION 1.4. OUTPUT LOADS 13
SECTION 1.5. OPTIONS 13
SECTION 1.6. OVERVIEW 13
FIGURE 1—SINGLE-LINE DRAWING-NORMAL OPERATION 13
SUBSECTION 1.6.A. NORMAL OPERATION 13
SUBSECTION 1.6.B. MANUAL BYPASS OPERATION 13
FIGURE 2—SINGLE-LINE DRAWING-MANUAL BYPASS 14
SUBSECTION 1.6.C. AC LOSS/BATTERY OPERATION 14
FIGURE 3—SINGLE-LINE DRAWING-AC LOSS/BATTERY OPERATION 14
SUBSECTION 1.6.D. EXTERNAL MAINTENANCE BYPASS OPERATION (OPTIONAL) 15
FIGURE 4—SINGLE-LINE DRAWING-EXTERNAL MAINTENANCE BYPASS OPERATION 15

CHAPTER 2 SPECIFICATIONS 16

TABLE 1—SPECIFICATIONS 16
SECTION 2.1. POWER RATING 16
SECTION 2.2. INPUT 16
SECTION 2.3. OUTPUT 16
SECTION 2.4. BATTERIES 16
SECTION 2.5. LAMPS AND LOADS 16
SECTION 2.6. CODES 16
SECTION 2.7. PROTECTION 16
SECTION 2.8. DIAGNOSTICS AND MAINTENANCE 17
SECTION 2.9. CABINET 17
SECTION 2.10. INSTALLATION 17
SECTION 2.11 SPECIAL APPLICATIONS 17
SECTION 2.12. WARRANTY 17

CHAPTER 3 FIELD REPLACEABLE UNITS (FRUS) 17

SECTION 3.1. MOTHER/MAIN BOARDS 17
SECTION 3.2. ALL OTHER PARTS 17

CHAPTER 4 TRANSPORTATION, INSPECTION, AND INSTALLATION 18

SECTION 4.1. HOW TO TRANSPORT THE SYSTEM 18
SECTION 4.2. INSPECTION 18
SECTION 4.3. LOCATION AND PLACEMENT 18
FIGURE 5—UPS DIMENSION DRAWING 19

CHAPTER 5 DESCRIPTION 19

SECTION 5.1. DESCRIPTION OF UPS CABINET/S 19
SECTION 5.2. DESCRIPTION OF AC INPUT AND AC OUTPUT TERMINALS BLOCKS 19
SECTION 5.3. MANUAL BYPASS SWITCH DESCRIPTION 19
FIGURE 6—MANUAL BYPASS SWITCH 20
SECTION 5.4. INPUT AND OUTPUT POWER REQUIREMENTS/CONNECTIONS 20
SECTION 5.5. SYSTEM CURRENT RATINGS 20
SECTION 5.6. GROUNDING 20

CHAPTER 6 INSTALLATION 20

SECTION 6.1 INSTALLING BATTERIES 20
FIGURE 7—BATTERY CONNECTION 21
SECTION 6.2. INPUT POWER CONNECTIONS 22
SECTION 6.3. OUTPUT POWER CONNECTIONS 22
FIGURE 8—INPUT/OUTPUT CURRENT RATINGS 23
SECTION 6.4. COMMUNICATIONS INTERFACE 24
FIGURE 9—COMMUNICATION INTERFACE 24

CHAPTER 7. DISPLAYS 25

SECTION 7.1 FRONT PANEL DESCRIPTION 25

CHAPTER 8 OPERATION AND PROCEDURE 26

SECTION 8.1. START-UP PROCEDURE 26
SECTION 8.2. SHUT-DOWN PROCEDURE 26
SECTION 8.3. BATTERY RUN AUDIBLE ALARM 26
SECTION 8.4. LOW BATTERY (RAPID ALARM) 26

CHAPTER 9. SYSTEM OPTIONS 27

SECTION 9.1. UNIT OPTIONS 27
SECTION 9.2. SERVICE PROGRAM DESCRIPTIONS 30
TABLE 2—SERVICE COVERAGE 32

CHAPTER 10. APPENDIXES 33

TABLE 3—TROUBLESHOOTING 33
FIGURE 11a—f — PERFORMIX PLASTI DIP PROCESS 34
FIGURE 12a b —ETERNALIGHT 1 SYSTEM LAYOUT 35
SECTION 10.1. LIMITED WARRANTY 36
SECTION 10.2. NOTES 39

REVISION HISTORY

REV	DATE	PRIMARY REASON FOR CHANGE
B	May. 17, 2012	Renovation Release
C	July. 10, 2012	Separate into User and Maintenance Manuals

LIST OF EFFECTIVE PAGES

PAGE	REV	PAGE	REV	PAGE	REV	PAGE	REV	PAGE	REV

Reproduction or Distribution forbidden

NOTICE: THIS DOCUMENT CONTAINS PROPRIETARY INFORMATION

This document contains proprietary and confidential information of Digital Signal Power Manufacturer, Inc. (”Digital Signal Power Manufacturer”). In consideration of the receipt of this document, the recipient agrees not to copy any of its contents, nor to disclose them to or allow them to be used by any person not currently an Digital Signal Power Manufacturer employee or an employee of the recipient having a need to know, without the express written consent of Digital Signal Power Manufacturer, and further agrees to surrender this document to Digital Signal Power Manufacturer when the reason for its receipt has terminated.

© 2012 Digital Signal Power Manufacturer, Inc. - All rights reserved

About this Manual

Thank you for selecting this Emergency Lighting Inverter System (ELI). It provides you with perfect protection for connected loads and equipment. This manual contains Important instructions that should be followed during maintenance of the DSPM Uninterruptible Power Supply. It includes important safety and maintenance instructions for operating the Emergency Lighting Inverter System. If you should have any problems with the Emergency Lighting Inverter System, please refer to this manual and/or call technical support.

Your DSPM Uninterruptible Power Supply is designed to provide reliable protection from power disturbances for many years. Please be sure to follow the manufacturers instructions to ensure optimum performance of the equipment. This manual contains descriptions of all controls and indicators required to operate the DSPM Uninterruptible Power Supply. Please read this manual carefully and retain it for future reference.

To the best of our knowledge and at the time written, the information contained in this document is technically correct and the procedures accurate and adequate to operate this instrument in compliance with its original advertised specifications. While every precaution has been made to ensure accuracy and completeness in this manual, DSPM assumes no responsibility and disclaims all liability for damages resulting from the use of this information or for any errors or omissions.

This instrument is designed to prevent accidental shock to the operator when properly used. However, no engineering design can render safe an instrument which is used carelessly. Therefore, this manual must be read carefully and completely before making any measurements. Failure to follow directions can result in a serious or fatal accident.

How to use this Manual

This manual is designed for ease of use, giving the user easy and quick reference to information. This manual uses notice icons to draw attention to the user important information regarding the safe operation and installation of the UPS. The notice icons used in this manual are explained below, and should be taken into account and adhered to whenever they appear in the text of this manual.

Technical Assistance

Safety Recommendations: If any problems are encountered while following this manual, DSPM assistance and correspondence is recommended. For technical support or help with any questions not covered in the manual, contract.

DSPM Inc.
1921 S. Quaker Ridge Place
Ontario, CA 91761

Work Hours: 8 a.m. – 5 p.m. Pacific Standard Time
Phone:1(877) DSPM POWER
1(877) 377-6769

After Hours: 5 p.m. – 1 a.m. Pacific Standard Time
1(951) 840-0811

Fax: 1(909) 930-3335
Email: techsupport@dspmanufacturing.com
Internet: http://www.DSPManufacturing.com

To expedite assistance if required, Please have the following information from your unit's System Label (found on the right side and inside door panel) available:

Model: _____

Model Number: _____

S/O Number: _____

Input Voltage: _____

Output Voltage: _____

Power Rating and Frequency: _____

IMPORTANT SAFETY INSTRUCTIONS

SAVE THESE INSTRUCTIONS

SAFETY

Notes and Safety Information

Following safety precautions is important when operating or servicing electrical equipment. Always heed these precautions since they are essential to the safe operation and servicing of this product. This Manual contains warning symbols which alert the user to check for hazardous conditions. The symbols are used extensively throughout this manual and are defined below. To ensure the safety of operating performance of this electrical equipment, these instructions must be adhered too.

WARNING: A Warning notice icon conveys information to protect the user and service personnel against hazardous conditions.

DANGER: A Danger notice icon conveys that there is a risk of electric shock, personal injury, or death to the user if instructions are not followed.

CAUTION: A Caution notice icon conveys to the user or service personnel information making them aware that there is a possibility of equipment damage.

NOTE: A Note notice icon indicates when the user should make a reference of information regarding the UPS operation, load status and display status. Such information is essential if DSPM, Inc. field service assistance and correspondence is required.

CAUTION!

ENSURE THAT NO FLUIDS OR OTHER FOREIGN OBJECTS CAN ENTER THE INVERTER SYSTEM.

NOTE!

READ THIS MANUAL IN ITS ENTIRETY BEFORE PERFORMING THE INSTALLATION, START-UP, OPERATION, OR MAINTENANCE OF THE UPS (Uninterruptible Power System) OR BATTERY SYSTEMS. FAILURE TO DO SO COULD RESULT IN ELECTROCUTION, FIRE, EXPLOSION, OR EQUIPMENT FAILURE.

WARNING!

ONLY FACTORY TRAINED OR AUTHORIZED PERSONNEL SHOULD ATTEMPT TO INSTALL OR REPAIR THE UPS OR ITS BATTERY SYSTEM. IMPROPER INSTALLATION HAS PROVEN TO BE THE SINGLE MOST SIGNIFICANT CAUSE OF START-UP PROBLEMS. HIGH AC AND DC ELECTRICAL VOLTAGES ARE PRESENT THROUGHOUT THE UNIT(S) AND INCORRECT INSTALLATION OR

SERVICING COULD RESULT IN ELECTROCUTION, FIRE, EXPLOSION, OR EQUIPMENT FAILURE.

CAUTION!

ALL POWER CONNECTIONS MUST BE COMPLETED BY A LICENSED ELECTRICIAN WHO IS EXPERIENCED IN WIRING THIS TYPE OF EQUIPMENT. WIRING MUST BE INSTALLED IN ACCORDANCE WITH ALL APPLICABLE NATIONAL AND LOCAL ELECTRICAL CODES. IMPROPER WIRING MAY CAUSE DAMAGE TO THE EQUIPMENTS, INJURY OR DEATH OF PERSONNEL. VERIFY THAT ALL HIGH AND LOW VOLTAGE INPUT POWER CIRCUITS ARE DE-ENERGIZED AND LOCKED OUT BEFORE INSTALLING CABLES OR MAKING ANY ELECTRICAL CONNECTIONS.

NOTE!

THIS EQUIPMENT GENERATES, USES, AND CAN RADIATE RADIO FREQUENCY ENERGY, AND, IF NOT INSTALLED AND USED IN ACCORDANCE WITH THIS MANUAL, MAY CAUSE INTERFERENCE TO RADIO COMMUNICATIONS. IT HAS BEEN TESTED AND FOUND TO COMPLY WITHIN THE LIMITS FOR A COMPUTING DEVICE PURSUANT TO SUB PART J OF PART 15 OF FCC RULES, WHICH ARE DESIGNED TO PROVIDE REASONABLE PROTECTION AGAINST SUCH INTERFERENCE WHEN OPERATED IN A COMMERCIAL ENVIRONMENT.

DANGER!

LETHAL VOLTAGES EXIST WITHIN THE EQUIPMENT DURING OPERATION. EXTREME CAUTION IS REQUIRED WHEN PERFORMING MAINTENANCE. OBSERVE ALL WARNINGS AND CAUTIONS IN THIS MANUAL. FAILURE TO COMPLY MAY RESULT IN SERIOUS INJURY OR DEATH. OBTAIN QUALIFIED SERVICE FOR THIS EQUIPMENT AS INSTRUCTED.

DANGER!

BE CONSTANTLY AWARE THAT THE UPS SYSTEM CONTAINS HIGH DC AS WELL AS AC VOLTAGES. WITH INPUT POWER OFF AND THE BATTERY, DISCONNECTED, HIGH VOLTAGE AT THE FILTER CAPACITORS AND POWER CIRCUITS SHOULD DISCHARGE WITHIN 30 SECONDS. HOWEVER, POWER CIRCUIT FAILURES CAN OCCUR, SO YOU SHOULD ALWAYS ASSUME THAT HIGH VOLTAGE MIGHT STILL EXIST 30 SECONDS AFTER SHUTDOWN. VERIFY THAT POWER IS OFF USING AC AND DC VOLTMETERS BEFORE MAKING CONTACT.

DANGER!

SOME COMPONENTS WITHIN THE CABINETS ARE NOT CONNECTED TO CHASSIS GROUND. ANY CONTACT BETWEEN FLOATING CIRCUITS AND THE CHASSIS IS A LETHAL SHOCK HAZARD.

DANGER!

OBSERVE ALL BATTERY SAFETY PRECAUTIONS DURING SERVICE OF THE UPS OR BATTERIES. EVEN WITH THE BATTERY CIRCUIT BREAKER IN THE OFF POSITION, THE DANGER OF ELECTROCUTION MAY STILL BE PRESENT. THE BATTERY POWER TO THE UNIT MUST BE LOCKED AND TAGGED "OFF" BEFORE PERFORMING ANY SERVICE OR WORK ON THE UNIT. FAILURE TO FOLLOW THOSE INSTRUCTIONS AND THE INSTRUCTION LISTED ABOVE AND ELSEWHERE IN THIS MANUAL COULD RESULT IN AN EXPLOSION, FIRE, EQUIPMENT FAILURE, OR ELECTROCUTION.

CAUTION!

EXERCISE EXTREME CARE WHEN HANDLING UPS AND BATTERY CABINETS TO AVOID EQUIPMENT DAMAGE OR INJURY TO PERSONNEL. CABINETS WEIGH SEVERAL HUNDRED POUNDS.

CAUTION!

TEST LIFT AND BALANCE THE CABINETS BEFORE MOVING. MAINTAIN MINIMUM TILT FROM VERTICAL AT ALL TIMES. THE BOTTOM STRUCTURE WILL SUPPORT THE UNIT ONLY IF THE FORKLIFT FORKS ARE COMPLETELY UNDERNEATH THE UNIT.

CAUTION!

INTERNAL BATTERY STRAPPING MUST BE SECURED BY THE CUSTOMER PRIOR TO CONNECTING THE BATTERY CABINETS TO THE UPS UNIT. THIS UNIT CONTAINS NON-SPILLABLE BATTERIES. KEEP THE UNIT UPRIGHT. DO NOT STACK. DO NOT TILT. ALWAYS FOLLOW THE BATTERY MANUFACTURER'S SAFETY INFORMATION TO PREVENT AN ACCIDENT THAT COULD RESULT IN INJURY OR DEATH.

WARNING!

LEAD-ACID BATTERIES CONTAIN HAZARDOUS MATERIALS. BATTERIES MUST BE HANDLED, TRANSPORTED, AND RECYCLED OR DISCARDED IN ACCORDANCE WITH FEDERAL, STATE, AND LOCAL REGULATIONS. BECAUSE LEAD IS A TOXIC SUBSTANCE, LEAD-ACID BATTERIES SHOULD BE RECYCLED RATHER THAN DISCARDED.

Electrical Hazard

DO NOT DISPOSE OF BATTERIES IN A FIRE, THE BATTERIES MAY EXPLODE.

Electrical Hazard

DO NOT OPEN OR MUTILATE THE BATTERIES. RELEASED ELECTROLYTE IS HARMFUL TO THE SKIN AND EYES AND MAY BE TOXIC.

A BATTERY CAN HAVE A HIGH SHORT CIRCUIT CURRENT AND PRESENT A RISK OF ELECTRICAL SHOCK. THE FOLLOWING PRECAUTIONS SHOULD BE OBSERVED WHEN WORKING ON BATTERIES:

1. **REMOVE WATCHES, RINGS OR OTHER METAL OBJECTS.**

2. **USE TOOLS WITH INSULATED HANDLES.**
3. **WEAR RUBBER GLOVES AND BOOTS.**
4. **DO NOT LAY TOOLS OR METAL PARTS ON TOP OF BATTERIES.**
5. **DISCONNECT CHARGING SOURCE PRIOR TO CONNECTING OR DISCONNECTING BATTERY TERMINALS.**
6. **DETERMINE IF BATTERY IS INADVERTENTLY GROUNDED. IF SO, REMOVE THE SOURCE OF THE GROUND. CONTACT WITH ANY PART OF A GROUNDED BATTERY CAN RESULT IN ELECTRICAL SHOCK. THE LIKELIHOOD OF SUCH SHOCK WILL BE REDUCED IF SUCH GROUNDS ARE REMOVED DURING INSTALLATION AND MAINTENANCE.**
7. **LEAD-ACID BATTERIES CAN PRESENT A RISK OF FIRE BECAUSE THEY GENERATE HYDROGEN GAS. THE FOLLOWING PROCEDURES SHOULD BE FOLLOWED:**
   - **DO NOT SMOKE WHEN NEAR BATTERIES.**
   - **DO NOT CAUSE FLAME OR SPARK IN BATTERY AREA.**
8. **DISCHARGE STATIC ELECTRICITY FROM YOUR BODY BEFORE TOUCHING BATTERIES BY FIRST TOUCHING A GROUNDED SURFACE.**

CAUTION!

IN CASE OF FIRE INVOLVING ELECTRICAL EQUIPMENT. ONLY CARBON DIOXIDE FIRE EXTINGUISHERS, OR THOSE APPROVED FOR USE ON ELECTRICAL EQUIPMENT, SHOULD BE USED. USE OF WATER ON FIRES INVOLVING LIVE HIGH VOLTAGE ELECTRICAL CIRCUITS COULD PRESENT AN ELECTROCUTION HAZARD.

DANGER!

TO REDUCE THE RISK OF ELECTRICAL SHOCK; DISCONNECT THE EMERGENCY LIGHTING INVERTER SYSTEM FROM THE MAIN SUPPLY BEFORE INSTALLING AN INTERFACE SIGNAL CABLE. RECONNECT THE POWER ONLY AFTER SIGNALING INTERCONNECTIONS HAVE BEEN MADE.

DO NOT DISMANTLE THE EMERGENCY LIGHTING INVERTER SYSTEM.

1. INTRODUCTION

1.1. GENERAL

The principles of operation described herein are applicable to all models. The DSPM, Inc. Eternalight 1 Emergency Lighting Inverters are manufactured to provide critical power for lighting during a power outage. The Eternalight 1 meets or exceeds the life safety codes of UL924 and UL1778. These codes were established to allow the emergency lighting inverters to provide critical power to the lighting circuits during a power failure. The emergency lighting inverter will then provide power for 90 minutes that will allow safe and orderly evacuation from the facility.

The product is an advanced Emergency Lighting Inverter System based on Intelligent Microprocessor Control. The Emergency Lighting Inverter System is an intelligent protector and provides pure, reliable AC power to the emergency loads – protecting them from utility power blackouts, swells, sags, surges and interference. All types of lamps are supported by our lighting inverter.

Under normal power conditions, this design enables the system to adjust and filter power fluctuations continuously and automatically. In the event of a power failure, it can immediately provide back-up power from the batteries without any interruption. When the utility power is connected or reconnected, the charger will automatically recharge the batteries.

When input power to the Eternalight 1 is lost during a power outage, the system will automatically draw power from its internal battery supply without any interruption. The critical load will receive only clean sine wave power. The internal VRLA (valve regulated lead-acid), maintenance-free batteries provide 90 minutes of backup power.

Upon restoration of input power, the Eternalight 1 automatically resumes normal operation, and immediately begins to recharge the batteries. The Eternalight 1 has an internal bypass circuit, which maintains the power to the load in case of internal UPS failure.

The Advanced Battery Management system in this unit uses a Digital Signal Processing/Pulse-Width Modulation (DSP/PWM) Smart Battery Monitoring System for managing the system batteries. The DSP/PWM Smart Battery Monitoring System is temperature compensated resulting in maintaining maximum runtime and battery life. The microprocessor controls recharge and the DSP/PWM offer overcharge protection.

The Eternalight 1 Online Emergency Lighting Inverter incorporates double-conversion technology that provides perfect protection specifically for Egress Lighting for facilities. It is designed to provide continuous and clean electrical power to a critical load. The load is powered by the inverter, which receives its power from the building source. In the event of an input power failure, the UPS will supply power to the critical load for the specified battery time.

The inverter uses of a double-conversion principle eliminates all sources of unwanted power disturbances. A rectifier converts the alternating current from the building source to Direct Current (DC). This DC charges the batteries and powers the inverter. With the basic DC voltage, the inverter generates a sinusoidal alternating current (AC) voltage, which continuously supplies the load. In times of power outrages, the 90-minute backup time that come standard in our units keep the load energized. If the input power is not restored promptly, backup power from the UPS battery permits the orderly shutdown of equipment supported by the UPS. The UPS is simple to start up, operate and maintain.

The Eternalight 1 is an on-line PWM inverter available in multiple output rating. It is listed for compliance to UL1778, UL924, UL924A and CSA107.1 standards. The Eternalight 1 is available with a variety of input or output voltages and power configurations. This information is provided on the System Labels located on the inside front door and the right side of the UPS. See Chapter 2 for a complete listing of the Eternalight 1 specifications.

This manual provides an overview of the Eternalight 1 components and their functions. The appearance and purpose of operator controls and indicators is described with procedures for installation, operation, start-up, and shutdown.

1.2. DEFINITIONS

1.2.1. UNINTERRUPTIBLE POWER SUPPLY SYSTEM (UPS) - All components within the UPS Module Cabinet and associated batteries, which function as a system to provide continuous, conditioned AC power to a load.

1.2.2. UPS MODULE CABINET - The metal enclosure which contains the Rectifier / Charger, Inverter, Static Transfer Switch, Internal Bypass line, operator controls, batteries (up to 30kVA models only) and internal control systems required to provide specified AC power to a load.

1.2.3. UPS MODULE - The Rectifier / Charger and Inverter assemblies which, under the direction of the internal control system and operator controls, provide specified AC power to a load.

1.2.4. RECTIFIER / CHARGER - The UPS components which contain the equipment and controls necessary to convert input AC power to regulated DC power required for battery charging and for supplying power to the Inverter.

1.2.5. INVERTER - The UPS components which contain the equipment and controls necessary to convert DC power from the Rectifier / Charger, or the battery, to AC power required by the critical load.

1.2.6. STATIC TRANSFER SWITCH - The device that connects the critical load to the bypass line when the Inverter cannot supply continuous power.

1.2.7. BYPASS LINE - The line, which conducts electricity directly from the input power source to the critical load during Maintenance or whenever the UPS is not completely operational.

1.2.8. AC INPUT POWER - Is the power provided by the electrical utility company, or auxiliary generator, which is connected to the UPS for supplying the critical load and recharging the battery.

1.2.9. BATTERY - The rechargeable battery strings that supply DC power to the inverter to maintain continuous AC power to the load during AC input power failure conditions.

1.3 THEORY OF OPERATION

1.3.1. Standby Mode

After power is applied, the system is placed in STANDBY mode and a self-check starts. During this period, the start subroutine checks for the input voltage and proper operation of the inverter and bypass SCR's. After the routine is completed and check confirmed OK, the system goes into the NORMAL mode.

1.3.2. Normal Mode

The input contactor K1 receives a closing signal, connecting input power to the DC supply transformer. The DC rectifier supplies the battery charger, Control Board and the DC/AC inverter circuit. The battery charger is then activated allowing the batteries to be continuously charged. The on-line DC/AC inverter converts the DC voltage to a pulse-width-modulation (PWM) waveform. This waveform is filtered and reconstructed back to a desired AC output.

1.3.3. Response To Input Power Failure

When the input power fails, the charger is turned off and the battery bank becomes a DC supply source to the inverter circuit, maintaining an uninterrupted AC supply to the protected load. The LCD screen will display a "UPS PROBLEM" message. When the facility power returns, stabilizes and is in phase with the backup power, the system controller closes the input contactor and the system returns to NORMAL. If the battery voltage drops below 16% of its nominal value and the facility power remains off, then the system will assume a FAILURE mode.

1.3.4. UPS Failure

The System controller will issue a FAILURE message on the LCD screen if any of the following conditions happen:

- Internal failure
- System overheats
- Battery bank undervoltage

During a FAILURE, the system stops its backup operation, inverter SCRs are switched OFF, and bypass SCRs are switched ON. A summary alarm 5V signal is sent to the hardwired interface. The system remains in this mode until power is cycled or system has been repaired when needed.

11.3.5. UPS Problem

The System controller will issue a UPS PROBLEM message on the LCD screen if any of the following conditions occur:

- Input power failure
- Output overload

During a PROBLEM mode, inverter IGBTs remain on and an alarm signal may be sent to the signal interface. The system will reset itself as soon as the problems disappears.

1.4. OUTPUT LOADS

The Eternalight 1 is designed to power any lighting system. There are, however, certain types of loads that exhibit an excessive inrush current when first turned on or at other times during operation.

The capacity of the Eternalight 1 may need to be greater than what would be estimated based on the system label requirements of loads previously discussed. Contact the factory directly if you have any questions about powering unusual loads from your Eternalight 1.

1.5. OPTIONS (See Unit Options for details)

The following options are available with the Eternalight 1:

1. **ECM120 and ECM277**—Environmental Control Module
2. **NOF**—Normally OFF Circuit 120Vac or 277Vac
3. **NOH**—Normally OFF "Hold On" Circuit 120Vac or 277Vac
4. **OCB**—Output Circuit Breaker/(s) 120Vac or 277Vac
5. **EPO**—Emergency Power Off
6. **EPO**—Emergency Power Off
7. **RSSP**—Remote Indicator Panel
8. **SNMP**—SNMP Card
9. **FAX**—Fax Modem
10. **MB**—Modbus Interface
11. **FC**—Form C Contacts
12. **STU3**—Onsite Startup
13. **EW**—Extended Warranty

1.6. OVERVIEW.

The UPS provides two power paths between the utility source and the critical load. Figure 1 shows the path for normal operation, with the load powered from the inverter. Figure 2 shows the path for bypass operation, with the load supplied through the static bypass line.

The Input circuit breaker (MCCB) for protection of the UPS and cables are field supplied and field installed.

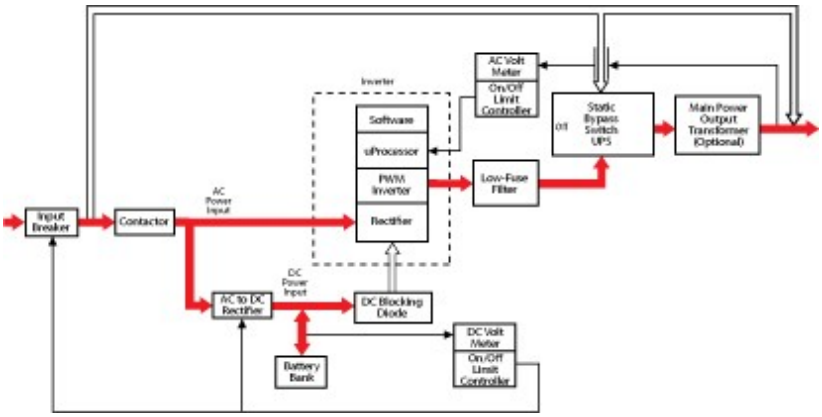

Figure 1 Single line Drawing - Normal operation

1.6.A. Normal Operation

During normal operation, the path through the inverter is used to power the load. Referring to Figure1: two rectifiers convert Input AC power to DC. DC power is utilized to charge the UPS battery system

(AC to DC Rectifier). The Inverter also convert AC to DC (Rectifier) to be able to generate clean AC power to supply the critical load.

The conversion - inversion process eliminates any voltage transients or fluctuations existing in the input power before it reaches the critical load.

1.6.B. MANUAL BYPASS OPERATION

Refer to Figure 2. A Manual Bypass Switch is provided as a standard feature of the DSPM's UPS. This switch is to bypass the inverter logic incase of failure, to enable the end user function until service can be performed. The advantage of this form of bypass is that the input filtering is still providing protection to the critical loads on the UPS. Figure 2 illustrates the flow diagram when the UPS has been manually by-passed.

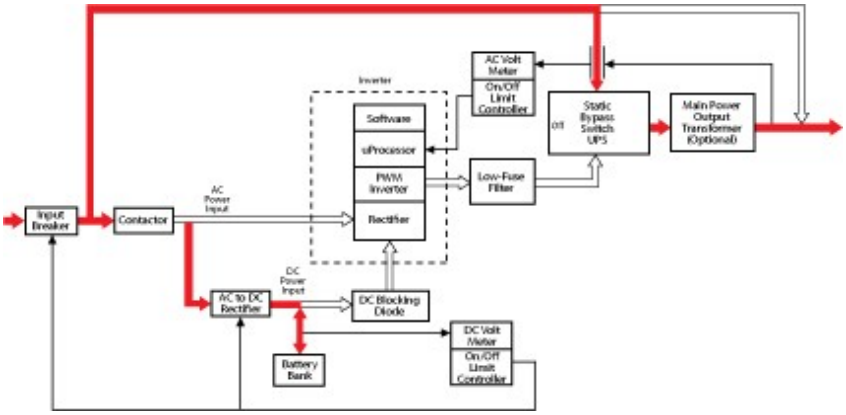

Figure 2 Single Line Drawing - Static Bypass Operation

1.6.C. AC Loss/Battery Operation

Referring to Figure 3, if the input power is interrupted, the battery will immediately supply the DC power required by the Inverter to maintain continuous AC power to the load. A fully charged battery will provide power for the specified time at the rated load, or longer at reduced load.

In the event of a power failure, the rectifiers will de-energize and the batteries will discharge into the Inverter and maintain power to the critical load until a) the battery capacity expires and the inverter turns off, or b) input power is restored after which the rectifiers will power the inverter and simultaneously recharge the batteries. Figure 3 illustrates the flow diagram during battery operation.

When power is restored after a low battery shutdown, the rectifiers automatically restart and, recharge the batteries and the Inverter is automatically restarted without operator intervention. The inverter auto-matically without operator intervention assumes the power from the Rectifier.

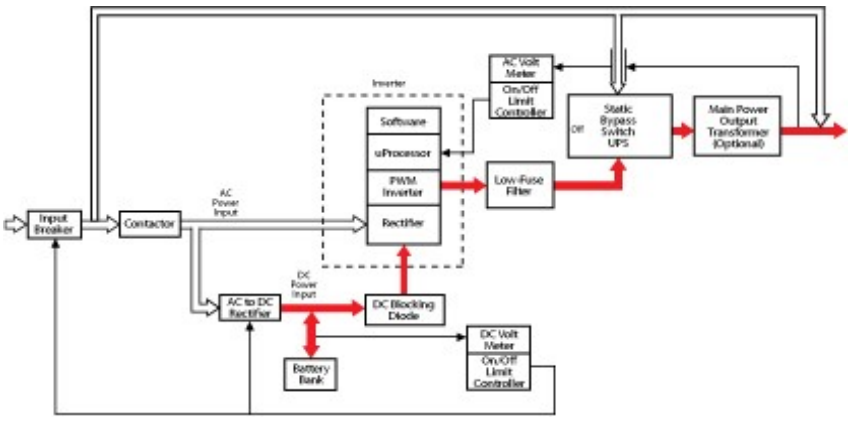

Figure 3 Single Line Drawings -AC Loss/Battery Operation

1.6.D. External Maintenance Bypass (EMB) Operation (Optional)

There is an optional External Maintenance Bypass which supplies the critical load with unconditioned input power . The purpose of this option is to route power to the critical load while the UPS' rectifier and inverter are de-energized, and during Start-up before the system is fully operational (refer to Figure 4).

With the External Maintenance Bypass there is a hard wired bypass that can be operated after the Static Bypass Switch has been operated, making it possible to isolate the entire UPS for service and maintenance. The internal control system determines the operation of the normal and External Maintenance Bypass paths, with the load powered from the inverter being the normal operation.

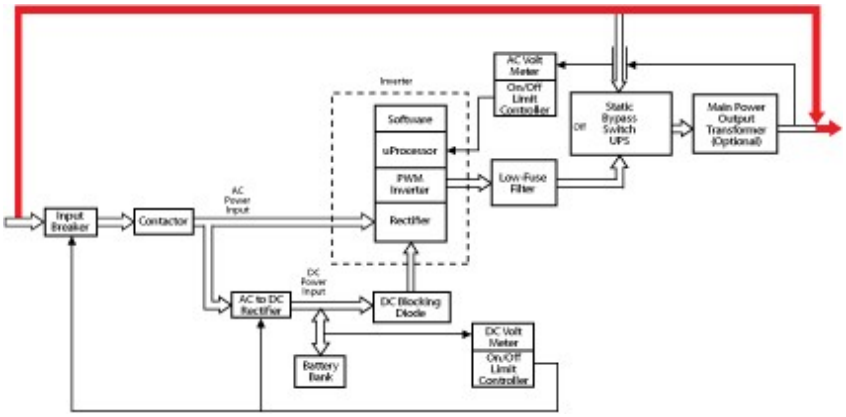

Figure 4 Single Line Drawings –External Maintenance Bypass Operation

2. SPECIFICATIONS

The Eternalight 1 maintains efficient AC Emergency Power to operate all emergency lighting fixtures at "full-light" output, providing superior dependability and security to commercial/industrial environments in a small footprint. The UPS System Label displays the rated kW as well as nominal voltages. There are System Labels located on the interior side of the UPS front door and the exterior side of the unit. The power rating in Table 1 are kW values, when KVA is displayed on System Label, divide kVA in Table 1 by.8 for correct dimensions.

Table 1

Eternalight 1 Series	Power Rating	UPS Cabinet Dimensions			Battery Cabinet Dimensions			Weight (combined)	British Thermal Unit	Battery Type	Voltage (VAC)		Output Protection	Safety Approvals
	KVA/KW	W	H	D	W	H	D	(lbs)	BTU's		Input	Output		
OE1	4.7	42"	71"	22.5"	not required			1200	1278.4	Sealed, Maintance free (AGM) lead calcium	*Select* 120, 208, 240, 277 or 480	*Select* 120, 208, 277, 480, 120/240 or 120/277	Input and output circuit breakers standard	UL924 NFPA 101 NFPA 70 NEC
	5.25	42"	71"	22.5"	not required			1200	1428					
	7.0	42"	71"	22.5"	not required			1450	1904					
	8.0	42"	71"	22.5"	not required			1450	2176					
	10.0	42"	71"	22.5"	not required			1820	2720					
	12.0	42"	71"	22.5"	not required			2210	3264					
	14.0	42"	71"	22.5"	not required			2550	3808					
	18.0	42"	71"	22.5"	42"	71"	22.5"	3750	4896					
	21.0	42"	71"	22.5"	42"	71"	22.5"	4375	5712					

2.1. POWER RATING

The Eternalight 1 units comes in power rating from 2.4 to 4.2 KW (Consult factory for other power ratings). They use the latest DSP/PWM technology to provide the most advanced performance and reliability features.

2.2. INPUT

120, 208, 240, or 277 VAC input 60Hz

2.3. OUTPUT

120, 277, 120-240, 120-277, 277 VAC True "on-line" design is ≥92% efficient at 100% linear load

2.4. BATTERIES

2.4.1. Sealed, maintenance-free, lead calcium (AGM) batteries
2.4.2. 10-Year prorated warranty
2.4.3. *DSP/PWM Smart Battery Monitoring System* is **TEMPERATURE COMPENSATED** maintaining maximum runtime and battery life
2.4.4. Microprocessor controlled recharge and DSP/PWM overcharge protection standard

2.5. LAMPS AND LOADS

2.5.1. Emergency power provides **FULL LIGHT OUTPUT** from all lamps and fixtures for the entire runtime
2.5.2. Operates fluorescent, compact fluorescent, incandescent, quartz, H.I.D., LED and other lamp types
2.5.3. Standard or electronic ballasts, dimming devices or panels, sensors and most control equipment
2.5.4. Standard or LED Exits and other safety equipment

2.6. CODES

2.6.1. Meet UL 924, NFPA 101, NFPA 70, NEC and OSHA standards
2.6.2. Cities of Chicago and New York approved
2.6.3. Complies with the Buy American Act

2.7. PROTECTION

2.7.1. Provides overload, surge and undercurrent protection using DSP/PWM technology to protect system performance and reliability
2.7.2. Surge protection against load surges as defined in ANSI/IEEE C62.45 category A and B

2.8. DIAGNOSTICS AND MAINTENANCE

2.8.1. DSP/PWM technology provides complete self diagnostic capabilities and LED Monitoring

2.8.2. Informative advanced Display and Alarms keep you in control of your emergency lighting environment 24/7

2.8.3 Automatically performs periodic self-tests ensuring a safely lighted environment *prior* to an emergency. The power supplies are able to do a 5 minute battery run the first of every month except for New Year's day when the test is for 90 minute. The testing can be enabled by going to the Auto-run screen and selecting Yes or No with the Menu Forward or Menu Reverse button. When the battery test happens the rectifier is turned off, and the batteries will sustain the load on the output. If the voltage dips too low the test is terminated prematurely, and a entry is recorded in the alarm log accordingly. Two minutes into the battery run test the voltage, power date, and time are logged in the battery log. This is a feature that is standard in our power supplies.

2.8.4. Single point of testing instead of multiple testing points with battery packs

2.8.5. Water Dots are placed on every shelf and door panel to indicate if moisture is present or has got inside the unit. The Dots are originally white in color but will turn red when water is absorbed.

2.9. CABINET

2.9.1. Modular design enables flexible installation

2.9.2. Forced air cooling for maximum reliability

2.9.3. All systems are self contained and require external battery cabinet (s)

2.10. INSTALLATION

2.10.1. Modular design and small footprint allow easy installation in electrical closet or other convenient locations

2.10.2. Phone assisted factory start-up standard for all systems

2.10.3. Extended warranty available

2.11. SPECIAL APPLICATIONS

2.11.1. DSPM offers numerous UL924 optional devices to meet unusual or difficult application parameters

2.11.2. ECM - Environmental Circuit Module allows fixtures and lamps on the emergency circuit (s) to be operated by normal switching and/or dimming devices in NON-emergency conditions

2.11.3. Dimming Panel Interface allows use with emergency lights controlled by common dimmer panel

2.12. WARRANTY

2.12.1. One-Year full warranty on system electronics

2.12.2. Battery warranty 1-year with 9-years pro-rated

2.12.3. System 1-year on-site warranty labor with DSPM phone assisted start-up

2.12.4. Five-Year powertrain warranty

2.12.5. Maintenance contracts available

3. FIELD REPLACEABLE UNITS (FRUS)

Each FRUS comes with detail instructions of how the part should be performed. At the ends of most wires/ cables are labels that indicates their locations. When ordering replacement parts from the factory, supply the information from the System Label (refer to Technical Assistance section in this manual). Include the model number, serial number, input/output voltages, and power rating when ordering parts. Replacement parts must be replaced by qualified factory trained service personnel only.

Circuit boards and IGBTs contain ESDS (Electro-Static Discharge Susceptible) components. Handle and package ESDS devices in accordance with JEDEC standard JESD625-A. Use a grounded ESD wrist strap when handling the devices and circuit boards. Always package components and circuit boards in static-dissipative plastic bags or the static-dissipative material that the FRUS came in before transporting (Even if a device has failed). Failure to do so could result in further damage, complicating repair and failure analysis.

3.1. MOTHER/MAIN BOARDS

The Mother/Main Boards are located on the three middle shelves and mounted with 10 screws. Verify that all connectors are matches with their designations and pins #1, 2, etc (**Note**: all plugs and connections are not used!) Unplug jumper on daughter board and all connectors from on Mother Board. Install the new board. Reconnect all plugs and connections returning them to their original orientations.

3.2. All Other Parts

Verify that the cables are marked before disconnecting. Replace the defective part with the new part. Reconnect wiring the same way as it was disconnected.

4. TRANSPORTATION, INSPECTION, AND INSTALLATION

4.1. HOW TO TRANSPORT THE SYSTEM

Note: ***Do not transport in a horizontal position. Cabinets should be maintained upright within +/- 15° of the vertical during handling.***

4.2. INSPECTION

4.2.1. Upon receipt, inspect the container and pallet for shipping damage. If there was any damage during transportation; **Do Not turn on the unit**. Immediately notify the shipping agent/transportation carrier and DSPM. If no damage is evident, move the packed DSPM UPS to its installation location.

The packaging is recyclable; keep it for reuse or please disposed of it.

4.2.2. Using care to avoid puncturing the shipping material with any sharp objects, which would damage the contents, open the shipping material by carefully removing any banding and shipping material from the sides, ends and top.

4.2.3. Remove the packing and vapor barrier and inspect the equipment for any obvious shipping damage. It is recommended that the units not be loosened from the shipping pallet until after all handling by forklift or pallet jack is completed.

4.2.4. Immediately file a claim with the shipping agency if any damage, as a result of shipping, is observed.

4.2.5. Follow these steps to inspect all surfaces for abrasions and dents:

- **4.2.5.1.** Open the front door of the cabinet.
- **4.2.5.2.** Verify that all the transformers, inductors, electrical, and electronic devices are firmly mounted.
- **4.2.5.3.** Verify that the transformer coils and terminal lugs are free of contact with any grounded metal surface and that the transformer terminal wires are securely connected.
- **4.2.5.4.** Verify that the internal Wiring is not damaged.
- **4.2.5.5.** Verify that all wires to and from the output filter assembly, input filter assembly, inverter assembly, and bypass switch are securely connected.
- **4.2.5.6.** Verify that the circuit breakers are firmly seated and that the wires are securely connected.
- **4.2.5.7.** Inspect all batteries for damage (cracks, leaks, loose connections, etc.,)
- **4.2.5.8.** Reinstall all panels, covers and close all doors.

4.3 LOCATION AND PLACEMENT

4.3.1. Before starting, check the load tolerance of the floor and verify that the floor will be able to support the UPS at its final destination and the route to get it there. After verifying the weights verify that when the unit is placed in its final position that the minimum clearances required have been met. Install the Emergency Lighting Inverter System in a protected area with adequate airflow and free from excessive dust. Do not operate the Emergency Lighting Inverter System where the temperature and humidity is out of the specified limits. Water Dots are placed on every shelf and door panel to indicate if moisture is present or has got inside the unit. The Dots are originally white in color but will turn red when water is absorbed.

WARNING: Condensation of water may occur if the system is unpacked in a very low temperature environment. In this case it is necessary to wait until the system is fully dry inside before proceeding with the connection of any power; otherwise an electrical shock hazards might exist. Installation and wiring must be performed in accordance with the local electrical code and under the guidance or instructions of professional personnel.

Note: Per code requirements, leave 3” on each side of the cabinet (including the back) and 3 foot clearance in front (Refer to Figure 5).

Storage of the system should be in a cool and dry area with the unit being upright and covered. The warranty can be affected if the unit is stored for more then 3 months without charging the batteries.

Operating Temperature: 0º to 40ºC (32º to 104ºF); **Storage Temperature:** -20º to 60ºC (-4º to 140ºF)

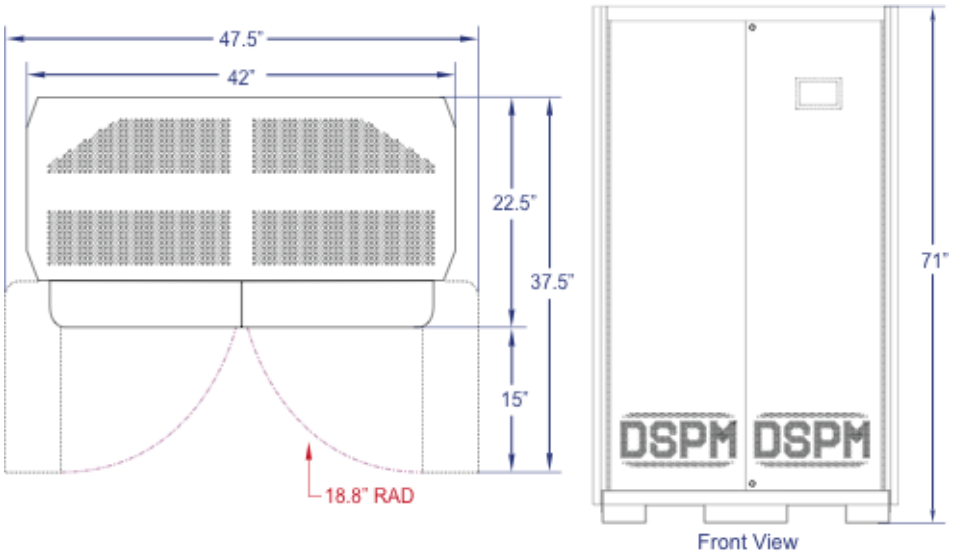

Figure 5

5. DESCRIPTION

5.1. DESCRIPTION OF UPS CABINET

5.1.A. SYSTEM COMPONENT LAYOUT

Figure 12a and b are the layouts that will help you find the parts and components in your Emergency Lighting Inverter. **Maintenance should only be performed by factory-trained or qualified personnel.** Do not attempt to service. If you need technical assistance, please contact DSPM.

LETHAL VOLTAGES EXIST WITHIN THE CABINET, EVEN WHEN THE UNIT IS DEENERGIZED. ONLY QUALIFIED SEVICE PERSONNEL WITH ADEQUATE TRAINING MUST SERVICE THIS EQUIPMENT.

5.2. DESCRIPTION OF AC INPUT AND AC OUTPUT TERMINALS BLOCKS

The AC Input, AC Output Terminals Blocks are provided for the connection of incoming power and the connection of the load (equipment) intended to be powered by the UPS. Refer to Figure 12a-b—Component layout for these connections and their locations in the UPS Cabinet.

5.3. MANUAL BYPASS SWITCH DESCRIPTION

In most units, this switch is located on the inside of the left door of the system (see Figure 12b—System Component Layout for exact location). The bypass switch is used in case of a failure of the lighting inverter. If the lighting inverter fails, place the bypass switch in the “MAN” position. In this position the inverter section is bypassed allowing the load to be powered by the utility until the inverter can be repaired. In case of system failure, contact factory for service. The Manual Bypass Switch is used to bypass the electronic (inverter) when the system have failed. The Manual Bypass Switch should never be operated when the UPS is supporting the load. The rotation of this switch will turn off the inverter. The Load will be fed from the Utility until the switch is place back into the UPS position, and the inverter is returned back to operation.

LETHAL VOLTAGES EXIST WITHIN THE CABINET, EVEN WHEN THE UNIT IS ON BYPASS. ONLY QUALIFIED SEVICE PERSONNEL WITH ADEQUATE TRAINING MUST SERVICE THIS EQUIPMENT.

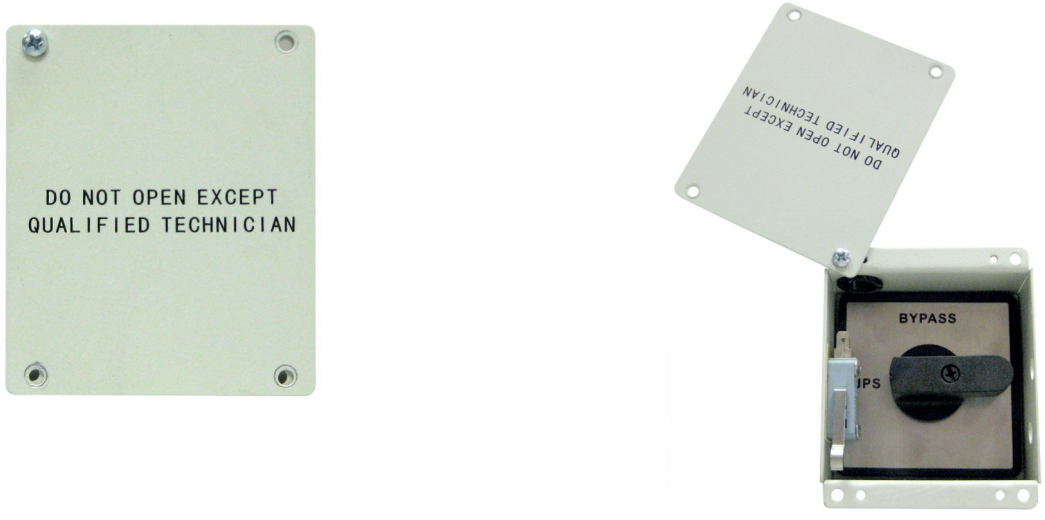

Figure 6

WARNING: Only an Authorized Service Technician should remove this cover.

NOTE: Operation of the bypass switch will cause the inverter switch to static bypass and turn off the inverter if it was running.

NOTE: If the cover over the manual bypass switch is not secured properly the inverter will not start and there will be an audible beep every one (1) to two (2) minutes.

WARNING: The manual bypass switch should only be operated by authorized personnel.

5.4. INPUT AND OUTPUT POWER REQUIREMENTS / CONNECTIONS

After unpacking and inspecting the Inverter System for shipping damage and reporting any such damage to the carrier, it is vital that the input power be connected correctly at the required voltages. It is highly recommended that a qualified electrician make all input and output power connections. It is vital that a true ground be brought into the unit, not a neutral. The ground conductor should be the same size as the two input / primary voltage phase conductors. The input power connections to the UPS come from building supplied services.

5.5. SYSTEM CURRENT RATINGS

All circuit breakers provided by the end user that are connected to the inputs and outputs, need to be of the “High Inrush” type. This is to prevent the breakers from tripping during the startup of the unit and its load. DSPM uses only the “High Inrush” type of breaker in its units. Refer to Figure 8 when determining the size of your input and output breakers.

5.6. GROUNDING

The Ground Terminals centralize the system grounds for routing back to the building service entry panel and the output load. The equipment grounding electrode terminals are all tied to a single point within the cabinet along with all grounds from within the UPS cabinet. This single point functions as a true, single-point ground. The output neutral point, equipment ground, transformer core, cabinet and system ground are all tied together at one point.

DO NOT CONNECT THE UPS GROUND WIRE TO ANY FORM OF AN ISOLATED GROUND SYSTEM. SUCH A CONNECTION WOULD RESULT IN A SAFETY HAZARD, AND UNDER GROUND FAULT CONDITIONS OR LIGHTNING STRIKES, MAY CAUSE SEVERE SYSTEM DAMAGE.

6. INSTALLATION

6.1. INSTALLING BATTERIES

Please refer to the following when installing and maintaining batteries:

6.1.1. Servicing of batteries should be performed or supervised by personnel knowledgeable of batteries and the required precautions. Keep unauthorized personnel away from batteries. When installing or replacing batteries, install or replace with the same number and type.

6.1.2. Do not dispose of battery or batteries in a fire. The battery may explode.

6.1.3. Do not open or mutilate the battery or batteries. Released electrolyte is harmful to the skin and eyes and may be toxic.

6.1.4. A battery can present a risk of electrical shock and high short circuit current. The following precautions should be observed when working on batteries:

6.1.4.1. Remove watches, rings, or other metal objects.

6.1.4.2. Use tools with insulated handles.

6.1.4.3. Wear rubber gloves and boots.

6.1.4.4. Do not lay tools or metal parts on top of batteries.

6.1.5. Make sure the proper polarity is observed. DC bus should be between 240 and 272 Vdc as tested at the top of the Battery Circuit Breaker-CB2 (Refer to Figure 12a—System Component Layout).

6.1.6. All battery are housed in the UPS unit in the Eternalight 1. Internal Battery Pack's jumpers are provided by the factory. When connecting batteries, you must connect the individual batteries into string (s). Please see battery layout on the inside door of your inverter unit. Note: Layout illustrate the number of batteries in a string, number of batteries per shelf, and their jumpers placements (i.e., negative of first battery to positive of the second battery, negative of the second battery to positive of third battery, etc.).

After creating each string of batteries, ensure that each string consist of the number of batteries indicated by the battery layout and the measured voltage from the first to the last battery is within tolerance. Connect the jumper on shelf (refer to Figure 7), that is identified as B1-POS (+) to the positive terminal of the first battery in the string. Then, connect the jumper (on the last shelf) identified as B20-NEG (-) to the negative terminal of the last battery in the string.

If you have any further questions about battery connections please contact DSPM Service Department at 1(877)377-6769.

6.1.A. CHARGING OF THE BATTERIES: The Emergency Lighting Inverter System charges its battery whenever it is connected to utility power and the input circuit breakers (CB1) is turned on. Dis-

Figure 7

connect charging source prior to connecting or disconnecting battery terminals. For the best results, charge the battery for 24 hours after they are hooked up and the ELI is brought on line.

6.2. INPUT POWER CONNECTIONS

It is highly recommended that a qualified electrician make all input power connections. The input power should be connected correctly at the required voltages and the ground cable should be of the same gauge as the input power cables. Ensure that the utility power to be connected is rated as on the system label. Make sure the hots, neutral and grounds are correctly identified and wired to the input terminal block as designated.

The input power connections to the UPS come from the building supplied services. These connections are made inside the UPS cabinet (refer to Figure 12a-b, System Component Layout). The input cables are connected to a three (3) pole terminal block(TB1) which is comprised of one (1) input power, neutral, and ground connections.

6.3. OUTPUT POWER CONNECTIONS

It is highly recommended that a qualified electrician make all input power connections. The output power should be connected correctly at the required voltages and the ground cable should be of the same gauge as the output power cables. Ensure that the loads to be connected are as listed on the system label, and the hots, neutrals and grounds are correctly identified and are wired to the output terminal block as designated. Loads not powered by the system cannot use the neutral of the Emergency Lighting Inverter System.

DO NOT BOND THE OUTPUT NEUTRAL TO CHASSIS GROUND! THE SYSTEM HAS BEEN BONDED AS REQUIRED BY THE MANUFACTURER AND NATIONAL ELECTRICAL CODE.

The output power connections are made inside the UPS cabinet (refer to Figure 12a-b, System Component Layout). The output cables are connected to a three (3) pole terminal block (TB2) which is comprised of one (1) input power, neutral, and ground connections. The output over-current protection from the DSPM UPS System is the responsibility of the End User.

KW	Input Voltage	Utility Feed Amps
4.7	120	68.6
	208	39.6
	240	34.3
	277	29.7
	480	17.1
5.25	120	76.6
	208	44.2
	240	38.3
	277	33.2
	480	19.1
7.0	120	102
	208	59
	240	51
	277	44.3
	480	25.5
8.0	120	116.7
	208	67.3
	240	58.4
	277	50.6
	480	29.2
10.0	120	146
	208	84.2
	240	73
	277	63.2
	480	36.5

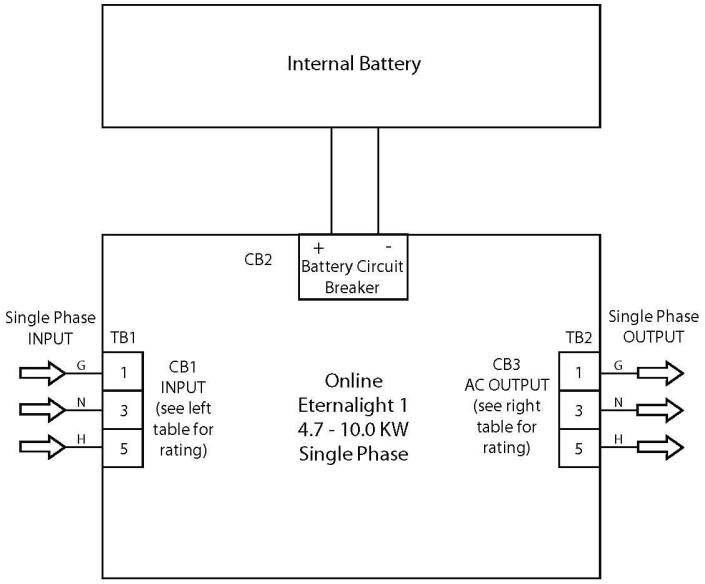

KW	Output Voltage	Max Output Amps
4.7	120	39.2
	277	17
	480	9.8
	120/240	39.2/19.6
	120/277	39.2/17
5.25	120	43.8
	277	19
	480	10.9
	120/240	43.8/21.9
	120/277	43.8/19
7.0	120	58.4
	277	25.3
	480	14.6
	120/240	58.4/29.2
	120/277	58.4/25.3
8.0	120	66.7
	277	29
	480	16.7
	120/240	66.7/33.4
	120/277	66.7/29
10.0	120	83.4
	277	36
	480	20.8
	120/240	83.4/41.7
	120/277	83.4/36

* Consult Factory for other wattages

Figure 8

All Systems Interconnect Cables to be supplied by others

KW	Input Voltage	Utility Feed Amps
12.0	120	175
	208	101
	240	87.5
	277	76
	480	43.8
14.0	120	204.2
	208	118
	240	102
	277	88.5
	480	51
18.0	120	262.5
	208	151.5
	240	131.3
	277	113.8
	480	65.6
21.0	120	306.3
	208	176.7
	240	153
	277	132.7
	480	76.6

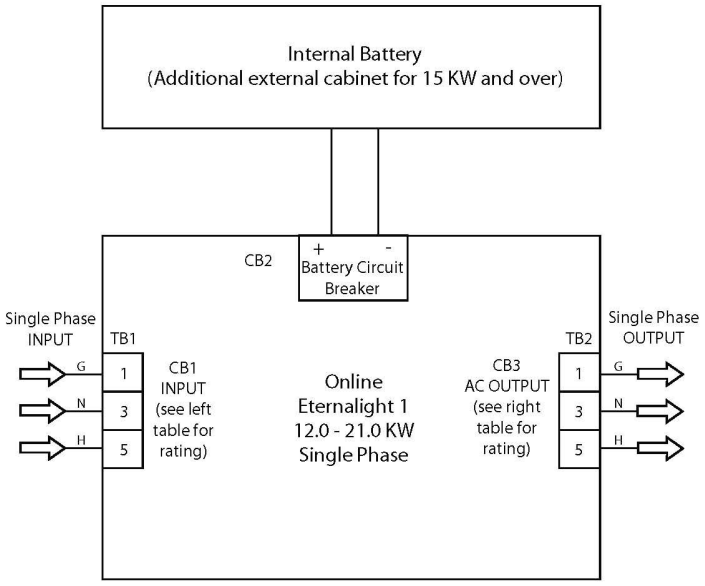

KW	Output Voltage	Max Output Amps
12.0	120	100
	277	43.4
	480	25
	120/240	100/50
	120/277	100/43.4
14.0	120	116.7
	277	50.6
	480	29.2
	120/240	116.7/58.4
	120/277	116.7/50.6
18.0	120	150
	277	65
	480	37.5
	120/240	150/75
	120/277	150/65
21.0	120	175
	277	75.8
	480	43.8
	120/240	175/87.5
	120/277	175/75.8

* Consult Factory for other wattages

6.4. COMMUNICATIONS INTERFACE

Software interface kits can be used with this Emergency Lighting Inverter System. The RS-232 interface uses a 9-pin female D-sub connector. The information provided to the connector consists of data about utility, load, and the Emergency Lighting Inverter System. The interface port pins and their functions are identified in Figure 9. Contact the factory for optional kits supplied or approved by DSPM. If used, connect the interface cable to the 9-pin computer interface port (RS-232 Standard Interface Port) on the Main PCB Control Board in the door (refer to Figure 9) of the Emergency Lighting Inverter System.

NOTE: Software Interface Kit's connection is optional. The Emergency Lighting Inverter System works properly without an optional interface connection. Use only factory supplied or authorized Emergency Lighting Inverter System monitoring cable!

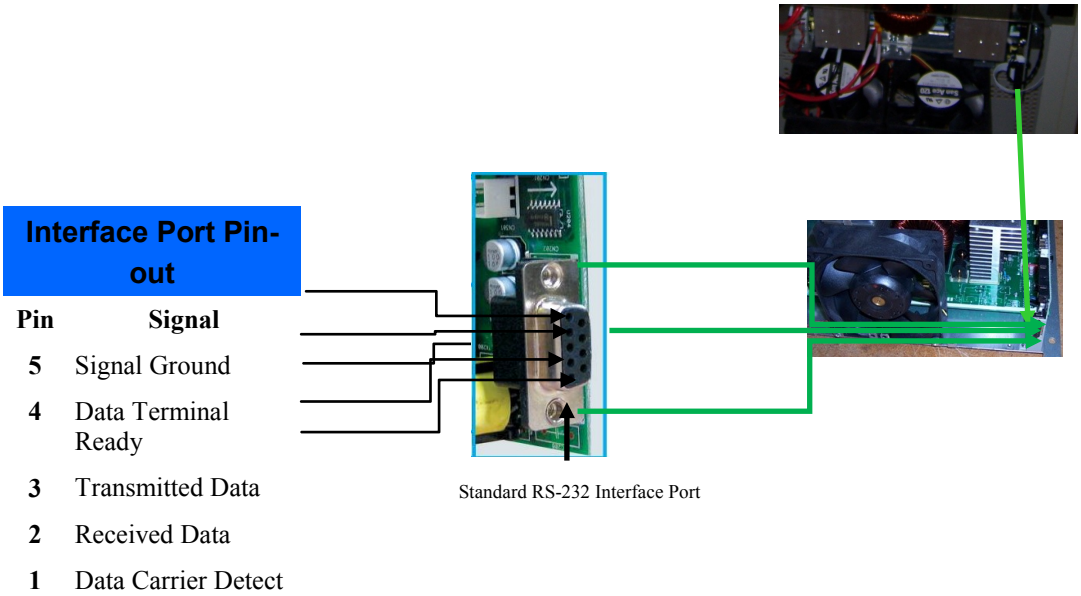

Figure 9

CAUTION: Use only factory supplied or authorized Emergency Lighting Inverter System monitoring cable!

7. DISPLAYS

7.1. FRONT PANEL DESCRIPTION

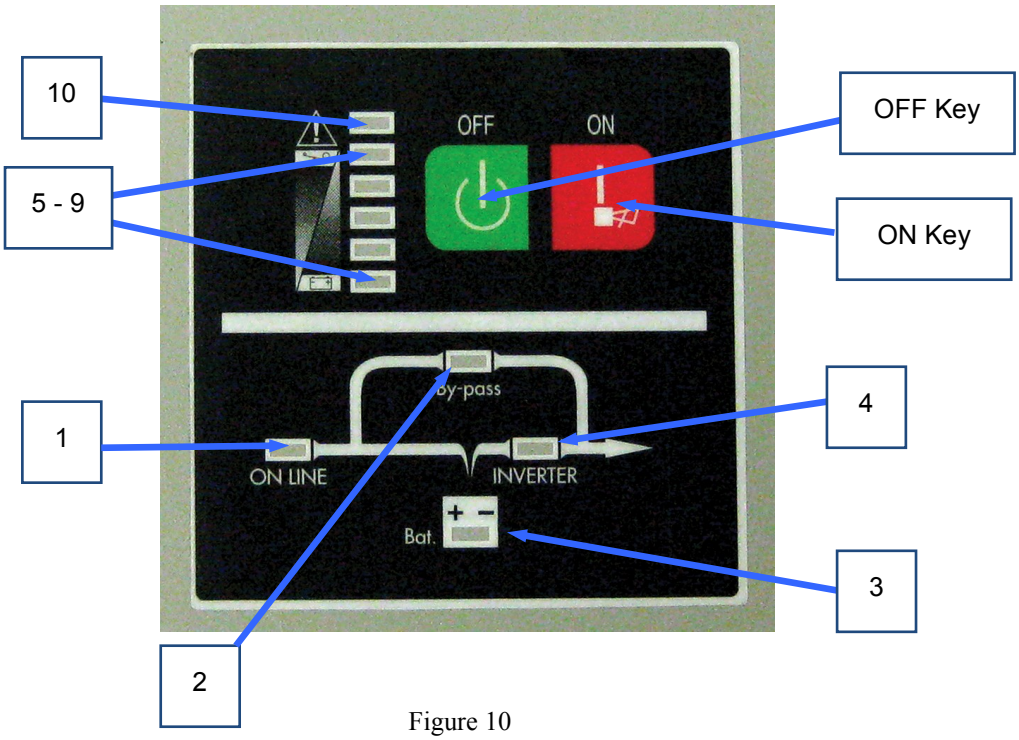

Figure 10

Displays

Refer to Figure 10 for descriptions of the Front Panel display's buttons and indicators.

7.1.1. – Line LED (Green): To indicate the AC Power is applied to the system input. In case this LED blinks, it means the main AC source is out of tolerance.

7.1.2. – Bypass LED (Yellow): To indicate the load is powered via the bypass.

7.1.3. – Battery LED (Yellow): To indicate the system is in battery backup mode when the building source power has failed.

7.1.4. – Inverter LED (Green): To indicate the system is powered through the inverter

7.1.5-9. – Load & Battery Capacity LED's:

a. Number 5 and 8 LED's are green colored and Number 9 (used as a Warning LED for overload or battery low) is yellow.

b. Number 5 to 8 LED's show the load % of the system if the main power is available (in normal operation). Each of the green LED's will indicate a % of the power level for the rating of the system.

NOTE: Depending on unit size the LED's 5 to 9 may not indicate the actual load.

c. In the battery operation, the LED's indicate the capacity (%) of the batteries run time remaining, As the batteries are depleted the LED's will extinguish from left to right. When LED number 9 is only lighted then there is 0-25% left on the battery run.

7.1.10. – Fault LED (Red): To indicate that the Emergency Lighting Inverter System is in a fault condition because of inverter shutdown or over temperature condition.

7.1.11. – OFF Key: This button needs to be pushed to turn the emergency lighting inverter off.

7.1.12. – ON Key: This button needs to be pushed to turn the emergency lighting inverter on.

8. OPERATION AND PROCEDURE

The initial startup must be done by a factory authorized technician or in conjunction with DSPM.

PLEASE CALL FOR STARTUP BEFORE APPLYING POWER TO THE UPS!

8.1. START-UP PROCEDURE

8.1.1. After making all power and grounding connections to the Emergency Lighting Inverter System; verify that all system breakers are set in the OFF position, and the Manual Bypass Switch (MBS) is in the UPS Position.

8.1.2. Energize the building feeder circuit for the input power for the UPS.

8.1.3. Turn on the DC circuit breaker (CB2). Set the Input Breaker (CB1) to the “ON” position, and verify that each of the following items takes place:

8.1.3.1. The fans come on.

8.1.3.2. The Processor perform a series of checks (These checks will be indicated by the display panels (see Figure 10) cycling through their LED’s).

8.1.4. After the cycling of the LED’s, press the “On Key” until it beeps.

Note: With the Batteries properly connected about 20 Second after unit is up and running, the batteries will automatically be placed online to the UPS.

8.1.5. Wait for the Displays to switch to the “Inverter".

8.1.6. Set the OUTPUT BREAKER (CB3) to the ON position.

8.1.7. Verify the output voltage is correct BEFORE POWERING the intended load.

8.1.8. Power up all electrical equipment connected to the UPS, as specified by the equipment manufacturers.

8.2. SHUT-DOWN PROCEDURE

8.2.1. Power down all electrical equipment connected to the UPS.

8.2.2. Press and hold the “Off Key” until the inverter beeps.

8.2.3. Set all OUTPUT BREAKERS to the OFF position.

8.2.4. Set the INPUT (CB1) to the OFF position.

8.2.4. Set the BATTERY (CB2) to the OFF position.

8.2.5. De-energize the input feeder breaker.

8.3. BATTERY RUN AUDIBLE ALARM

When the system is running on “Battery Backup” mode, the system will emit an audible alarm. The alarm stops when the Emergency Lighting Inverter System returns to “Normal” mode operation. Pressing the “On” key/button can silence the alarm during backup mode. In the backup mode the alarm occurs every 4 seconds until low battery.

8.4. LOW BATTERY (RAPID ALARM)

In the “Backup” mode, when the energy of the battery is 5% - 10%, the system beeps rapidly until the system shuts down.

NOTE: The “Low Battery” alarm condition cannot be silenced.

9. SYSTEM OPTIONS

9.1. UNIT OPTIONS

The following is a brief description of the available options for the Eternalight 3:

ECM120 and ECM277—Environmental Control Module
Environmental Control Module (ECM) provides superior dependability and security to commercial and industrial environments. It can operate individual fixtures, lamps, circuits, or be daisy chained for controlling multiple loads (One ECM is used per switching device or circuit)/qty. The ECM is perfect for hallways, classrooms, corridors, meeting rooms or individual offices.

The ECM was designed specifically for the egress emergency lighting market. It is a small module that has many applications. The dimensions are 1.25”x1”x2”, and comes in two voltage sensing ranges—a 100VAC which has a range of 100-140VAC, and a 200VAC which has a 200-300VAC range. This small and powerful unit is the most versatile module for many applications in the egress emergency lighting market.

The DSPM difference is the patented ECM which is connected to selected fixtures and/or lamps which allows normal operating parameters to be maintained. In the event of an AC power outage, the fixtures, lamps and/or loads connected to the ECM will continue or immediately begin operating at full-light output for a maximum of 90 minutes (or other run time as required by UL924 egress codes).

NOF—Normally OFF Circuit 120Vac or 277Vac
Normally OFF Circuit output is an excellent option when the customization needs is to provide, in addition, power only in cases of emergency (i.e. exiting lighting or evacuation power). In the event of an AC power outage, the fixtures, lamps and/or loads connected to the emergency circuit (s) will immediately begin operating at full-light output for a maximum of 90 minutes (or other run time as required by UL924 egress codes).

NOH—Normally OFF “Hold On” Circuit 120Vac or 277Vac
Normally OFF “Hold On” Circuit outputs are basically the same as our Normally Off Circuit option. Both are excellent options when the customization needs is to provide, in addition, power only in cases of emergency (i.e. exiting lighting or evacuation power). The difference between the two is that the NOH feature allows the emergency circuit (up to 10 minutes) to remain energized after the utility power is restored. This means that in the event of an AC power outage, the fixtures, lamps and/or loads connected to the emergency circuit (s) will immediately begin operating at full-light output for a maximum of 90 minutes (or other run time as required by UL924 egress codes). When utility power is restored, the emergency circuit (s) will stay energized for up to 10 minutes (depending on user setting). At the end of the preset time, the normally-off circuit (s) will shutoff.**OCB**—Output Circuit Breaker/(s)

EPO—Emergency Power Off
Emergency Power Off option gives the user the ability to instantly turning the UPS off without having to throw the breakers. The EPO option is primarily used as a personnel safety feature that will shutoff all power to the UPS output and load. When pressed the input utility power is still on the terminal block, but the microprocessor turns the inverter and rectifier off.

RSSP—Remote Indicator Panel
Remote Indicator Panel option enables the user to remotely monitor the UPS. Through the use of relays, the RSSP allows the user to know if the UPS is operating on the input utility power or its battery bank and if the UPS’s output is “On” or “Off”. This feature allows for the UPS to be located away from the load that it operates or controls.

SNMP—SNMP Card
Simple Network Management Protocol (**SNMP**) is an "Internet-standard protocol for managing devices on IP networks.” Devices that typically support SNMP include routers, switches, servers, workstations, printers, modem racks, and more. It is used mostly in network Management systems to monitor network-attached devices for conditions that warrant administrative attention.

UPS and Emergency Lighting Inverter manufacturers have adopted the SNMP standard to allow users

to easily communicate with their UPS systems. SNMP makes it possible for one node on a network to communicate with another node enabling the power supply to send out emails to anyone on the network, if an email server is available.

DSPM will remain at the cutting edge of technology and convenience by having SNMP as an option on its power supplies. The SNMP will be able to send emails to interested parties when a problem with the power supply occurs. The SNMP will host a java webpage that shows all the relevant voltages, currents, powers, energies, times, alarms, associated with the power supply. The operator will also be able to remotely operate the power supply as if they are standing in front of it pushing buttons.

FAX—Fax Modem
Facsimile *Mo*dulator-*Dem*odulator (**Fax Modem**) is a "Telephone line managing devices on an IP networks. Its standard features allow users to send a fax by using the telephone access of an E-mail service, and receive incoming and send outgoing faxes via E-mail with the Fax content presented as a file attachment." Devices that typically support FAX include routers, switches, servers, workstations, printers, and more.

A fax modem enables a computer to transmit and receive documents. A fax modem is like a data modem but is designed to transmit and receive documents to and from a fax machine or another fax modem. Some, but not all, fax modems do double duty as data modems.

UPS and Emergency Lighting Inverter manufacturers have adopted the FAX to allow users to easily communicate with their UPS systems via a telephone line. FAX makes it possible for node network communicate with the UPS systems to send out emails to anyone on the network, if an email server is available.

DSPM will remain at the cutting edge of technology and convenience by having FAX as an option on its power supplies. The FAX will be able to send emails to interested parties when a problem with the power supply occurs.

MB—Modbus Interface
Modbus Interface is a serial communications protocol that is simple and robust for connecting industrial electronic devices. Modbus is often used to connect a supervisory computer with a remote terminal unit (RTU) in supervisory control and data acquisition systems. Modbus allows for communication between a system that measures temperature, real power, load percentile, battery current, and frequency, and communicates the measured results to a computer.

DSPM will remain at the cutting edge of technology and convenience by having MB as an option on its power supplies. Our lighting inverter are programmed to “talk Modbus”. DSPM’s lighting inverters respond to commands send through TCP Modbus. We use a gateway that converts the Ethernet physical layer into a RS232 physical layer which our control board uses. With the use of MB, the user will be able to monitor normal operation and know when problems occurs with the UPS or its load (s).

FC—Form C Contacts
Form C Contacts is an option to be used when it is necessary to turn on or off one device by another device. This is done by the Form C Contacts control of two circuits: one normally-open contact and one normally-closed contact with a common terminal. One use of Form C Contacts may be with an automatic dialer. If the output of the UPS goes off, the automatic dialer hooked to the normally “Off” contacts will energize calling the maintenance telephone.

SRB—Seismic-Rated Bracket
DSPM’s **Seismic-Rated Brackets** are built for use in seismic zone 0 through 4. DSPM’s Seismic-Rated Brackets are Ideal for blocking and strapping to foundation to hold UPSs in place in case of earthquake. Consult your local building code or official for information about local zoning laws.

STU3—Onsite Startup
Onsite Startup is an option that can be purchased along with all DSPM’s product when the standard **Telephone Startup** is not what you desire. When purchased, we send a qualified technician to your site to do the startup.

EW—Extended Warranty

Extended Warranty is for one (1) year onsite parts and labor.

OCB—Output Circuit Breaker/(s) 120Vac or 277Vac
Output Circuit Breaker/(s) are an excellent feature for separating and controlling the load in the UPS. Furthermore, the controlling of the individual branches that constitutes your load can be done while the UPS is running, giving the customer multiple options or ways to use their UPSs.

Subject to change without notice.

9.2. SERVICE PROGRAM DESCRIPTIONS

TOS Equipment Turn On Service WITHOUT On Site Warranty

- Equipment Turn On Service is for customer that would like to have start-up performed without adding additional coverage to the of the equipment warranty.
- This coverage can be performed as an On-Site Startup Service for any DSPM product.
- All parts and labor to repair if **NOT** covered under a current Warranty or Service Plan and will be billed from DSPM current rates unless covered by a current warranty or service plan.

CI Certification Inspection Visit

- The Certification/Inspection is a service provided to certify equipment capable is placed under a warranty/service plan.
- The Certification Inspection is complete when all repairs are completed
- The Certification Inspection is billed at DSPM current hourly rates based on time of day and day of week service is performed.
- All part needed to complete the repairs are billed from DSPM current list prices.

SW58 Extended On-Site Warranty 8-5 Mon.-Fri.

- This Extended Warranty Plan is to be purchased while the equipment is still under current warranty coverage, or after approval by DSPM and a Certification Inspection by DSPM.
- This plan covers all replacement parts and labor including travel time and expenses for all emergency calls to service the unit. All service calls will be made between 8:00 a.m. and 5:00 p.m. and will be limited to Monday through Friday with the exception of the DSPM's designated holidays.
- If the Customer requests remedial maintenance outside of the contracted coverage or preventive maintenance, DSPM will provide this service. This service will be charged to the Customer at DSPM's standard hourly rates in effect at the time of the service, and will be subject to an available field engineer.
- DSPM will provide all replacement parts for parts that are found defective during emergency service calls. If replaced parts are used from any Customer- spare parts kit, DSPM will replace them to the Customer-owned spare parts kit with no charges to the Customer.
- DSPM will include installation of any changes for safety reasons and at DSPM option, install any factory enhancements and upgrades, and reliability changes or improvements during the emergency service call. Uninterruptible Power Systems (UPS) and Emergency Lighting Inverter's batteries are **NOT** warranted under this plan unless specified. DSPM will provide the maintenance and testing for the batteries at DSPM's the hourly rates in effect for DSPM. DSPM unless specified otherwise in contract, will **NOT** provide Battery replacements but will assist the customer in the replacement of the batteries through the battery manufacturers warranty.

SW724 Extended On-Site Warranty 24Hr/day 7Days/week Except Holidays

- This Extended Warranty Plan is to be purchased while the equipment is still under current warranty coverage, or after approval by DSPM and a Certification Inspection by DSPM.
- This plan covers all replacement parts and labor including travel time and expenses for all emergency calls to service the unit. All service calls will be made Seven (7) days a week exception of the DSPM's designated holidays.
- If the Customer requests remedial maintenance outside of the contracted coverage or preventive maintenance, DSPM will provide this service. This service will be charged to the Customer at DSPM's standard hourly rates in effect at the time of the service, and will be subject to an available field engineer.
- DSPM will provide all replacement parts for parts that are found defective during emergency service calls. If Replaced parts are used from any Customer- spare parts kit, DSPM will replace them to the Customer-owned spare parts kit with no charges to the Customer.
- DSPM will include installation of any changes for safety reasons and at DSPM option, install any factory enhancements and upgrades, and reliability changes or improvements during the emergency service call. Uninterruptible Power Systems (UPS) and Emergency Lighting Inverter's batteries are **NOT** warranted under this plan unless specified. DSPM will provide the maintenance and testing for the batteries at DSPM's the hourly rates in effect for DSPM. DSPM unless specified otherwise,

will **NOT** provide Battery replacements but will assist the customer in the replacement of the batteries through the battery manufacturers warranty.

SW36 Extended On-Site Warranty 24Hr/day 7Days/week including Holidays

- This Extended Warranty Plan is to be purchased while the equipment is still under current warranty coverage, or after approval by DSPM and a Certification Inspection by DSPM.
- This plan covers all replacement parts and labor including travel time and expenses for all emergency calls to service the unit. All service calls will be made Seven (7) days a week exception of the DSPM's designated holidays.
- If the Customer requests remedial maintenance outside of the contracted coverage or preventive maintenance, DSPM will provide this service. This service will be charged to the Customer at DSPM's standard hourly rates in effect at the time of the service, and will be subject to an available field engineer.
- DSPM will provide all replacement parts for parts that are found defective during emergency service calls. If Replaced parts are used from any Customer- spare parts kit, DSPM will replace them to the Customer-owned spare parts kit with no charges to the Customer.
- DSPM will include installation of any changes for safety reasons and at DSPM option, install any factory enhancements and upgrades, and reliability changes or improvements during the emergency service call. Uninterruptible Power Systems (UPS) and Emergency Lighting Inverter's batteries are **NOT** warranted under this plan unless specified. DSPM will provide the maintenance and testing for the batteries at DSPM's the hourly rates in effect for DSPM. DSPM unless specified otherwise, will **NOT** provide Battery replacements but will assist the customer in the replacement of the batteries through the battery manufacturers warranty.

SF58-n Full Service Contract 8-5 Mon.-Fri.

- This Full Service Plan is to be purchased while the equipment is still under current warranty coverage, or after approval by DSPM and a Certification Inspection by DSPM.
- This Full Service Plan covers all emergency calls to service the unit and one (1) Preventive Maintenance call per year. Additional Preventive Maintenance calls can per purchased/added to the plan
- This plan covers all replacement parts and labor including travel time and expenses for all emergency calls and one (1) Preventive maintenance call to service the unit. All service calls will be made between 8:00a.m. and 5:00p.m. and are limited to Monday through Friday excluding DSPM's designated holidays.
- If the Customer requests remedial maintenance or preventive maintenance outside of the contracted coverage, DSPM will provide this service. This service will be charged to the Customer at DSPM's standard hourly rates in effect at the time of the service, and will be subject to an available field engineer.
- DSPM will provide all replacement parts for parts that are found defective during emergency service calls. If Replaced parts are used from any Customer- spare parts kit, DSPM will replace them to the Customer-owned spare parts kit with no charges to the Customer.
- DSPM will include installation of any changes for safety reasons and at DSPM option, install any factory enhancements and upgrades, and reliability changes or improvements during the preventive maintenance service call. Uninterruptible Power Systems (UPS) and Emergency Lighting Inverter's batteries are **NOT** warranted under this plan unless specified. DSPM will provide the maintenance and testing for the batteries at DSPM's the hourly rates in effect for DSPM. DSPM unless specified otherwise, will **NOT** provide Battery replacements but will assist the customer in the replacement of the batteries through the battery manufacturers warranty.

SF724-n Full Service Contract 24Hr/day 7 Days/week Except Holidays

- This Full Service Plan is to be purchased while the equipment is still under current warranty coverage, or after approval by DSPM and a Certification Inspection by DSPM.
- This Full Service Plan covers all emergency calls to service the unit and one (1) Preventive Maintenance call per year. Additional Preventive Maintenance calls can per purchased/added to the plan
- This plan covers all replacement parts and labor including travel time and expenses for all emergency calls and one (1) Preventive maintenance call to service the unit. All service calls will be made Seven (7) days a week with exception of the DSPM's designated holidays.
- If the Customer requests remedial maintenance or preventive maintenance outside of the contracted coverage,

DSPM will provide this service. This service will be charged to the Customer at DSPM's standard hourly rates in effect at the time of the service, and will be subject to an available field engineer.

- DSPM will provide all replacement parts for parts that are found defective during emergency service calls. If Replaced parts are used from any Customer- spare parts kit, DSPM will replace them to the Customer-owned spare parts kit with no charges to the Customer.
- DSPM will include installation of any changes for safety reasons and at DSPM option, install any factory enhancements and upgrades, and reliability changes or improvements during the preventive maintenance service call. Uninterruptible Power Systems (UPS) and Emergency Lighting Inverter's batteries are **NOT** warranted under this plan unless specified. DSPM will provide the maintenance and testing for the batteries at DSPM's the hourly rates in effect for DSPM. DSPM unless specified otherwise, will **NOT** provide Battery replacements but will assist the customer in the replacement of the batteries through the battery manufacturers warranty.

SF365-n Full Service Contract 24Hr/day 7 Days/week including Holidays

- This Full Service Plan is to be purchased while the equipment is still under current warranty coverage, or after approval by DSPM and a Certification Inspection by DSPM.
- This Full Service Plan covers all emergency calls to service the unit and one (1) Preventive Maintenance call per year. Additional Preventive Maintenance calls can per purchased/added to the plan
- This plan covers all replacement parts and labor including travel time and expenses for all emergency calls and one (1) Preventive maintenance call to service the unit. All service calls will be made Seven (7) days a week with exception of the DSPM's designated holidays.
- If the Customer requests remedial maintenance or preventive maintenance outside of the contracted coverage, DSPM will provide this service. This service will be charged to the Customer at DSPM's standard hourly rates in effect at the time of the service, and will be subject to an available field engineer.
- DSPM will provide all replacement parts for parts that are found defective during emergency service calls. If Replaced parts are used from any Customer- spare parts kit, DSPM will replace them to the Customer-owned spare parts kit with no charges to the Customer.
- DSPM will include installation of any changes for safety reasons and at DSPM option, install any factory enhancements and upgrades, and reliability changes or improvements during the preventive maintenance service call. Uninterruptible Power Systems (UPS) and Emergency Lighting Inverter's batteries are **NOT** warranted under this plan unless specified. DSPM will provide the maintenance and testing for the batteries at DSPM's the hourly rates in effect for DSPM. DSPM unless specified otherwise, will **NOT** provide Battery replacements but will assist the customer in the replacement of the batteries through the battery manufacturers warranty.

Plan Type	COVERAGE	LABOR	PARTS	TRAVEL EXPANSES	EMERGENCY CALLS	PREVENTIVE MAINTENANCE
TOS	8-5 Mon-Fri	X	X[1]	X		
CI	Service is as per customer request	X		X		
SW58*	8-5 Mon-Fri	X	X	X	X	
SW724*	7 days per week 24 hours per day Except Holidays	X	X	X	X	
SW365*	7 days per week 24 hours per day Including Holidays	X	X	X	X	
SF58-n*	8-5 Mon-Fri	X	X	X	X	X
SF724-n*	7 days per week 24 hours per day Except Holidays	X	X	X	X	X
SF365-n*	7 days per week 24 hours per day Including Holidays	X	X	X	X	X

Table 2

NOTES:

X Included with Plan Type

X[1] Included If Performed During Warranty Period or With Unit Under a Service Contract. Coverage for parts must be from other coverage such as an Extended Warranty or Service Contract.

-n indicates the number of Preventive Maintenance Calls per year

* Must be purchased during an active original factory warranty, during an active Extended Warranty, during an active Service Contract, or After a CI with DSPM Management approval.

Multiple Unit discount for more then one unit at a single location only, and startups are all at the same time.

SERVICE AND SUPPORT AT ALL TIMES

10. APPENDIX

10.1. FIGURES AND TABLES

TroubleShooting		
Problem	**Possible Reasons**	**Solutions**
Doesn't operate after pressing ON/OFF switches. No lights on, no warning sounds.	Input power source not available. Main input circuit breaker open.	Check the input power.
		Check Emergency Lighting Inverter System input circuit breaker is "ON".
	Time of pressing the "ON" button may be too short.	Keep pressing "ON" button for 1 second.
	Output short circuit or overload on Emergency Lighting Inverter System.	Turn off Emergency Lighting Inverter System, take off all load to make sure there are no problems on it or any internal short circuits.
Fault light is on. The alarm keeps beeping.	Emergency Lighting Inverter System is broken.	Contact DSPM Inc. for service or help.
Alarm keeps beeping.	Unit is overloaded.	Reduce some of the load.
Utility indicating light is blinking.	The voltage of utility is exceeding Emergency Lighting Inverter input range.	Verify input voltage.
Available time of batteries is too short.	Batteries haven't been charged.	Keep Emergency Lighting Inverter System "ON" for over 20 hours to recharge the batteries.
	Emergency Lighting Inverter System is overloaded.	
	Batteries are aged and need to be replaced.	
	The charger is out of order.	
Battery's light is on when the power is supplied by utility.	The voltage of batteries is too low or batteries haven't been connected.	Check out batteries part of the Emergency Lighting Inverter System, make sure they are well connected. If there is any damage to batteries, contact DSPM immediately.

Table 3

When insulated grip tools are not available, a method for insulating grips on tools that we use at DSPM using Plasti Dip by Performix is illustrated in Figures 10a-f. The illustration is only an example of how to insulate your tools, i.e. you may want to insulate the open end of the wrench. The product give the user a lot of flexibility when it comes to how many coats to apply (as many as you want). Applying multiple coats by following the instructions on the can should insulate sufficiently.

Figures 11a-f

DSPM cannot control use of this product and will not accept liability.

System Component Layout

The following layout will help you find the parts and components in your Emergency Lighting Inverter. Do not attempt to service. If you need technical assistance, please contact DSPM.

Maintenance should only be performed by factory-trained or qualified personnel.

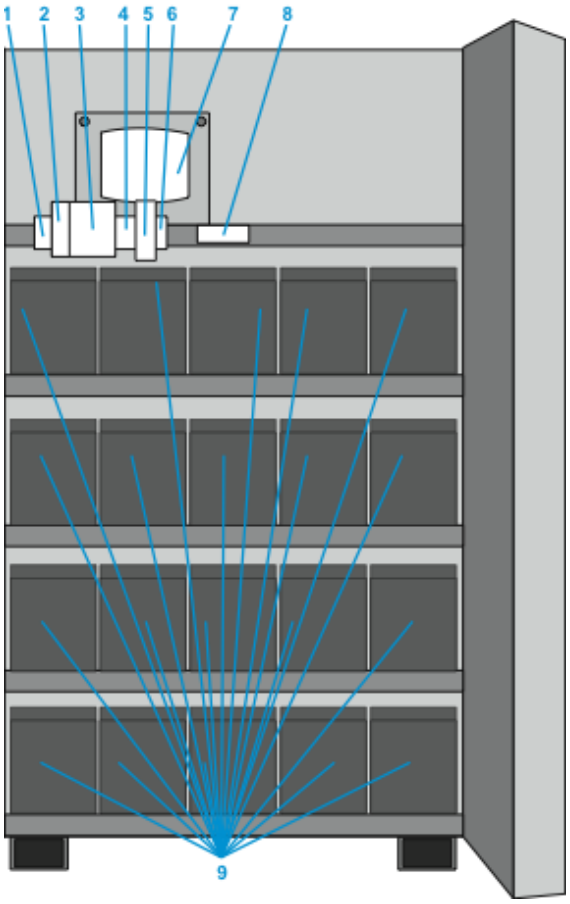

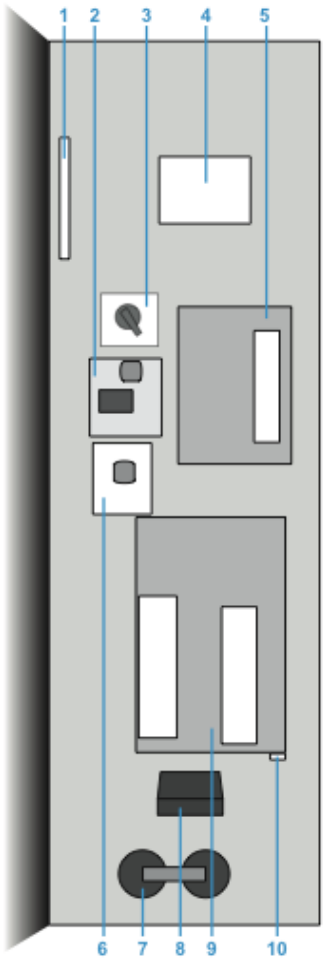

1 - Manufacturers Label
2 - Output Filter
3 - Bypass Switch
4 - Display
5 - Charger Board
6 - Input Filter
7 - DC Caps
8 - Fans
9 - Main Power Board
10 - Interface*

*Please see the "Interface" section of this manual for more detailed information

Inside Door Layout:

1 -	Input Terminal Block
2 -	Input Circuit Breaker
3 -	Battery Breaker
4 -	Output Terminal Block
5 -	Output Circuit Breaker
6 -	Environmental Control Terminal Block
7-	Output Transformer
8 -	TB/Circuit Breaker Label
9 -	Batteries

Figure 12a—b

10.2. LIMITED WARRANTY

TEN (10) YEAR DESIGN LIFE VALVE REGULATED LEAD ACID (VRLA) BATTERIES & BATTERY CABINET PRODUCTS

This Warranty is given ONLY to purchasers who buy for commercial or industrial use in the ordinary course of each purchaser's business.

General:

DSPM Corporation products and systems are in our opinion the finest available. We take pride in our products and are pleased that you have chosen them. Under certain circumstances we offer with our products the following Warranty Against Defects in Material and Workmanship.

Please read your Warranty carefully. This Warranty sets forth our responsibilities in the unlikely event of defect and tells you how to obtain performance under this Warranty.

LIMITED WARRANTY

AGAINST DEFECTS IN MATERIAL AND WORKMANSHIP PRODUCTS COVERED:

Ten(10) Year Design Life Valve Regulated Lead (VDRLA) Batteries, and DSPM manufactured battery cabinets, for Uninterruptible Power Supply (UPS) system applications.

Terms of Warranty:

DSPM-Manufactured Battery Cabinets (not including batteries): As provided herein, each DSPM manufactured battery cabinet is warranted to be free of defects in material and workmanship for a period of: (i) one year from the start-up date provided start-up is performed by DSPM personnel, occurs within six (6) months of the DSPM shipping date and the product has been stored in a suitable environment prior to start-up; or (ii) in any event, a maximum of eighteen (18) months from date of product shipment from DSPM. The warranty duration shall be whichever period described in the preceding sentence expires first. The start-up date will be determined only from the completed inspection and start-up sheet provided DSPM to User. The product shipment date will be determined only from the DSPM bill of lading. If any part or portion of the DSPM product fails to conform to the Warranty within the Warranty period, DSPM, at its option, will furnish new or factory remanufactured products for repair or replacement of that portion or part and reinstall the replacement product.

Ten (10) Year Design Life VRLA Batteries: DSPM does not manufacture batteries, but does warrant certain ten (10) year design life VRLA batteries. Subject to the further conditions and limitations set forth in this document, ten (10) year design life VRLA batteries (the "Warranty VRLA Batteries") that are purchased from DSPM and used in DSPM-manufactured battery cabinets are warranted to be free of defects in material and workmanship for a period of: (i) one year from date of shipment on a full replacement basis with a functionally equivalent battery; and (ii) after the 1st year, an additional nine years on a pro rata basis. The product shipment date will be determined only from the DSPM bill of lading.

From time-to-time DSPM is requested by Users, as defined below, to procure non-Warranty VRLA Batteries for User on a per-order basis. Under these circumstances, DSPM assigns to User any warranties which are made by the manufacturers and suppliers of such non-VRLA Warranty Batteries and which are assignable, but DSPM makes NO REPRESENTATIONS as to the effectiveness or extent of such warranties, assumes NO RESPONSIBILITY for any matters that may be warranted by such manufacturers or suppliers and extends no coverage under this Warranty to such non-VRLA Warranty Batteries.

Warranty Extends to First Purchaser for Use, Non-transferable:

This Warranty is extended to the first person, firm, association, or corporation for whom the DSPM product specified herein is originally installed for use in the United States or Canada (the "User"). This Warranty is not transferable or assignable without the prior written permission of DSPM.

Drawings, Descriptions:

DSPM warrants for the period and on the terms of the Warranty set forth herein that the covered product will conform to the descriptions contained in the certified drawings, if any, applicable thereto, to DSPM final invoices, and to applicable DSPM product brochures and manuals published as of the date of product shipment ("Descriptions"). DSPM does not control the use of any product. Accordingly, it is understood that the Descriptions are NOT WARRANTIES OF PERFORMANCE AND NOT WARRANTIES OF FITNESS FOR A PARTICULAR PURPOSE.

Warranty Claims Procedure:

Within a reasonable time, but in no case to exceed thirty (30) days, after User's discovery of a defect, User shall contact DSPM at 1-(909) 930-3353. All defective products an component parts replaced under this warranty become the property of DSPM.

DSPM-Manufactured Battery Cabinet: Subject to the terms and conditions specified herein, should DSPM determine that the battery cabinet is defective, a DSPM field service representative will repair or replace (at DSPM'S option) the non-conforming DSPM product warranted hereunder, without charge for material or labor, provided start-up of the DSPM product was performed by DSPM personnel. In all other instances, User will be charged for labor performed at DSPM then current rates. Warranty coverage will be extended only after DSPM inspection discloses the claimed defect and shows no signs of treatment or use that would void the coverage of this Warranty.

Ten (10) Year Design Life VRLA Batteries: Subject to the terms and conditions specified herein, should DSPM determine that a Warranty VRLA Battery is defective within the initial one year warranty period, DSPM will replace the Warranty VRLA Battery with a functionally equivalent battery. During the pro rata portion of the warranty period, DSPM will replace a Warranty VRLA Battery that DSPM determines to be defective based on the below pro rata formula. The formula yields a pro rata credit value, which shall be applied against the battery manufacturer's current published list purchase price of a new product of equal or greater Ampere Hour capacity.

Non-Warranty VRLA Batteries: With respect to non-Warranty VRLA Batteries procured by DSPM for Users, DSPM makes NO REPRESENTATIONS as to the effectiveness or extent of warranties that may be assigned to
Users for such non-Warranty VRLA Batteries, assumes NO RESPONSIBILITY for any matters that may be warranted by manufacturers or suppliers of non-Warranty VRLA Batteries and extends no coverage under this Warranty to such non-Warranty VRLA Batteries.

PRO RATA CALCULATION FOR CREDIT

[(Battery Manufacturer's Current Published List Purchase Price for the Warranty VRLA Battery) X ((# of Months of Total Warranty) - (# of Months of Un-Expired Warranty)] / (# of Months of Total Warranty) = Pro Rata Price

Warranty Performance of Component Manufacturers:

It is DSPM'S practice, consistent with its desire remedy Warranty defects in the most prompt and effective manner possible, to cooperate with and utilize the services of component manufacturers and their authorized representatives in the performance of work to correct defects in the DSPM components. Accordingly, DSPM may utilize third parties in the performance of Warranty work including repair or replacement hereunder, where, in DSPM'S opinion, such work can be performed in less time, with less expense and in closer proximity to the DSPM product.

Items Not Covered By Warranty:

THIS WARRANTY DOES NOT COVER DAMAGE OR DEFECT CAUSED BY misuse, improper application, wrong or inadequate electrical current or connection, inadequate water or drain services, negligence, inappropriate on site operating conditions, repair by non-DSPM designated personnel, accident in transit, tampering, alterations, a change in location or operating use, exposure to the elements, Acts of God, theft or installation contrary to DSPM'S recommendations or specifications, or in any event if the DSPM (for cabinets) or other manufacturer's (for batteries) serial number has been altered, defaced, or removed.

THIS WARRANTY DOES NOT COVER shipping costs, installation costs, circuit breaker resetting or maintenance or service items and further, except as may be provided herein, does NOT include labor costs or transportation charges arising from the replacement of the product any part thereof or charges to remove same from any premises of User.

THIS WARRANTY IS VOID if User allows any battery for the DSPM UPS product to discharge below the minimum battery voltage cutoff point. Furthermore, the warranty is void if the user does not start recharging a discharged battery within forty-eight hours.

REPAIR OR REPLACEMENT OF A DEFECTIVE PRODUCT OR PART THEREOF DOES NOT EXTEND THE ORIGINAL WARRANTY PERIOD.

THE PRODUCTS LISTED IN THIS WARRANTY ARE NOT FOR USE IN THE CONTROL AREA OR ANY REACTOR CONNECTED OR SAFETY APPLICATIONS OR WITHIN THE CONTAINMENT AREA OF A NUCLEAR FACILITY OR WHERE THE PRODUCTS HAVE POTENTIAL FOR DIRECT PATIENT CONTACT OR WHERE A SIX (6) FOOT CLEARANCE FROM A PATIENT CANNOT BE MAINTAINED AT ALL TIMES. THE PRODUCTS LISTED IN THIS WARRANTY MAY BE USED IN APPLICATIONS INVOLVING LIFE-SUSTAINING OR LIFE-SUPPORTING DEVICES ONLY WHERE THE END-USED CUSTOMER HAS SIGNED DSPM'S HEALTHCARE APPLICATION SALES AGREEMENT, OTHERWISE THE WARRANTY IS VOID.

Limitations:

- THIS WARRANTY IS IN LIEU OF AND EXCLUDES ALL OTHER WARRANTIES, EXPRESS OR IMPLIED, INCLUDING MERCHANTABILITY AND FITNESS FOR A PARTICULAR PURPOSE.
- USER'S SOLE AND EXCLUSIVE REMEDY IS REPAIR OR REPLACEMENT OF THE PRODUCT AS SET FORTH HEREIN.

- IF USER'S REMEDY IS DEEMED TO FAIL OF ITS ESSENTIAL PURPOSE BY A COURT OF COMPETENT JURISDICTION, DSPM'S RESPONSIBILITY FOR PROPERTY LOSS OR DAMAGE SHALL NOT EXCEED ONE TIMES THE NET PRODUCT PURCHASE PRICE.
- IN NO EVENT SHALL DSPM ASSUME ANY LIABILITY FOR INDIRECT, SPECIAL, INCIDENTAL, CONSEQUENTIAL OR EXEMPLARY DAMAGES OF ANY KIND WHATSOEVER, INCLUDING WITHOUT LIMITATION LOST PROFITS, BUSINESS INTERRUPTION OR LOSS OF DATA, WHETHER ANY CLAIM IS BASED UPON THEORIES OF CONTRACT, NEGLIGENCE, STRICT LIABILITY, TORT, OR OTHERWISE.

Additional Limitations & Conditions for Batteries

- A battery will only be considered defective if it fails to deliver at least 80 percent of its rated capacity during the warranty period. Rated capacity is that which is published in the manufacturer's official product literature for the specific product at the time of shipment.
- Batteries must be charged, discharged, operated, stored and serviced in accordance with applicable manufacturer's instructions.
- Each battery must be the proper size, design and capacity for its intended UPS application at 25 degrees Centigrade.
- The purchaser (end user) shall give a freshening charge to the battery every six months after the date code on the battery until final installation.
- Temperature:
    1. Average annual temperature shall not exceed 25 degrees Centigrade (77 degrees Fahrenheit).
    2. Cell temperature shall not exceed 32 degrees Centigrade (90 degrees Fahrenheit) for any 30-day period.
    3. Operation or storage of any product for any length of time in an environment having a temperature above 40 degrees Centigrade will void the warranty with respect to those products.
- The warranty period shall be adjusted based on actual operating conditions such as temperature and frequency of discharge as published and specified by the battery manufacturer. The warranty period will be reduced 50% for every 8 degrees Centigrade increase in operating temperature above 25 degrees Centigrade (base temperature).
- Batteries in the same string must be the same manufacturer, same model. If not, the warranty is void.
- The warranty does not apply to batteries used in cycle applications.

Miscellaneous:

- NO SALESPERSON, EMPLOYEE OR AGENT OF DSPM IS AUTHORIZED TO ADD TO OR VARY THE TERMS OF THIS WARRANTY. Warranty terms may be modified, if at all, only in writing and signed by a DSPM official.
- DSPM obligations under this warranty are conditioned upon timely receipt of full payment of the product purchase price and any amounts due from User under this Warranty. DSPM reserves the right to supplement or change the terms of this Warranty in any subsequent warranty offering to User or others.
- In the event that any provision of this Warranty should be or becomes invalid and/or unenforceable during the warranty period, the remaining terms and provisions shall continue in full force and effect.
- User shall complete the attached User Warranty Card and forward it to DSPM within thirty(30) days of receipt of the DSPM product.
- This Warranty shall be governed by, and construed under, the laws of the State of California.
- This Warranty represents the entire agreement between DSPM and User with respect to the subject matter herein and supersedes all prior or contemporaneous oral or written communications, representations, understandings or agreements relating to this subject.

VRLA Battery & Cabinet Warranty 4/30/12

10.3. NOTES